Journal of Business Analytics

ISSN: 2573-234X (Print) 2573-2358 (Online) Journal homepage: www.tandfonline.com/journals/tjba20

Philosophical approaches to managing generative AI agents as artificial persons at work

Thomas B. Kane

To cite this article: Thomas B. Kane (25 Mar 2025): Philosophical approaches to managing generative AI agents as artificial persons at work, Journal of Business Analytics, DOI: 10.1080/2573234X.2025.2482652

To link to this article: https://doi.org/10.1080/2573234X.2025.2482652

© 2025 The Author(s). Published by Informa UK Limited, trading as Taylor & Francis Group.

Published online: 25 Mar 2025.

Submit your article to this journal

Article views: 866

View related articles

View Crossmark data

Full Terms & Conditions of access and use can be found at
https://www.tandfonline.com/action/journalInformation?journalCode=tjba20

JOURNAL OF BUSINESS ANALYTICS
https://doi.org/10.1080/2573234X.2025.2482652

RESEARCH ARTICLE

OPEN ACCESS Check for updates

Philosophical approaches to managing generative AI agents as artificial persons at work

Thomas B. Kane

Division of Management, Work and Organisation, Stirling Business School, University of Stirling, Stirling, UK

ABSTRACT
The Fourth Industrial Revolution is expected to disrupt economic and social systems nationally, internationally and globally. It is clear that two of the distinguishing disruptors of the Fourth Industrial Revolution have been in business uses of Generative Artificial Intelligence and Cyberphysical Systems across the Internet of Things. This paper offers Business Analysts new analytical tools for guiding business strategy in these times. The contribution of the paper lies in adapting Beer's Viable System Model for use in the Fourth Industrial Revolution, by inserting into its classic format contributions from three profoundly significant philosophers of society, of being, and of language. Firstly, by presenting any institutional viable systems as intentional artificial persons at work within the bounds of a Hobbesian social contract. Secondly, it demonstrates how the Viable System Model can adopt Heideggerian phenomenology to explore the ontological characteristics of generative AI agents. Finally, Wittgenstein language games are employed to explore the intentional behaviours of artificial persons with respect to their allotted social contract. The tools offered are proposed to aid national governance, business management and to ensure decorous living conditions for natural and artificial persons alike during this exciting new industrial revolution.

ARTICLE HISTORY
Received 1 October 2024
Accepted 8 March 2025

KEYWORDS
Word; generative AI; cyberphysical systems; cybernetics; management discourse

1. Introduction

The Fourth Industrial Revolution (Schwab, 2017) (4IR) is in full swing, particularly so since November 2022, when ChatGPT was launched on the world, and could generate original content from user prompting – thereby introducing the world to Generative AI (Gen AI) and prompt engineering. Since that time, it is fair to say that significant uptake of ChatGPT 3 and its ease of use (Sarrion, 2023), coupled with the possibilities of Gen AI (Huang, 2023) have exploded in the business imagination and promise major upheaval in the world of work. ChatGPT 4 is now offering word-to-action performative capacity coupled with chain-of-thought reasoning capacity (Lu et al., 2024). With the rapid development of the foundation models, we find governments, organisations, citizens pondering what a ChatGPT 5.0 or 6.0 or 9.0 would look like, and how the world and the environment will be changed as a consequence.

In his seminal text on the 4IR (Schwab, 2017), Schwab noted that 4IR was distinctive from the Third Industrial Revolution (3IR) in three ways. Firstly, in the exponential pace of disruptive evolutions happening concurrently across wide-ranging industrial environments. Secondly, that this new revolution "combines multiple technologies that are leading to unprecedented paradigm shifts in the economy, business, society, and individually". And thirdly, that this revolution "involves the transformation of entire systems, across (and within) countries, companies, industries and society as a whole".

This paper adopts a conceptual approach (Jaakkola, 2020) to the task of adapting the theory of Beer's cybernetic Viable System Model (VSM), to work with Generative AI agents and Cyberphysical systems in the 4IR. The VSM is a distinguished tool of organisational research from the 3IR but has a number of features that render it insufficient as a comprehensive methodology for the 4IR. The proposed adaptations to the VSM are to extend its scope as a management and production tool capable of engaging with tools of institutional viable systems as artificial persons at work – both as scaffolded team members within the controlled environment of the business organisation itself, and also as organisationally produced tools that have been specified and delivered to a customer for use in their real-world environment.

Wiener introduced cybernetics (Wiener, 2019) as a means of governing complex systems as they pursue a set of varied operational goals to acceptable conclusions. Wiener's contribution to cybernetics culminated in a concern about how such systems could be

CONTACT Thomas B. Kane t.b.kane@stir.ac.uk Division of Management, Work and Organisation, Stirling Business School, University of Stirling, Stirling FK9 4LA, Scotland, UK

This article has been corrected with minor changes. These changes do not impact the academic content of the article.

© 2025 The Author(s). Published by Informa UK Limited, trading as Taylor & Francis Group.
This is an Open Access article distributed under the terms of the Creative Commons Attribution-NonCommercial-NoDerivatives License (http://creativecommons.org/licenses/by-nc-nd/4.0/), which permits non-commercial re-use, distribution, and reproduction in any medium, provided the original work is properly cited, and is not altered, transformed, or built upon in any way. The terms on which this article has been published allow the posting of the Accepted Manuscript in a repository by the author(s) or with their consent.

used in the large to the detriment of society (Wiener, 1988) and his work in both the development of Cybernetics and its dangers has new relevance in the twenty first century (Hall et al., 2015). Beer adapted Wiener's work to the task of organisational management and operational research by developing the 5-system Viable System Model (Beer, 1967, 1972).

The first contribution of this paper, in adapting the VSM, will be in recognising how Beer's VSM can be accommodated within Thomas Hobbes organisation of state (Hobbes & Macpherson, 1985), thereby adding social contracts for artificial persons at work.

The social contract of an Artificial Person at work is something that the agent can be measured against, and the terms of the contract can be governed both within the organisation, and crucially also, in the 4IR, by other stakeholder agencies outwith the business environment, operating under differing social contracts. This makes it possible for businesses and other societal stakeholders to address the deployment of tools of the 4IR on organisational sustainability (Baijens et al., 2022; Monson, 2023), managing disruption (Peng et al., 2021; Vanderkooi et al., 2024), dealing with ethics (Kane, 2019; Vidgen et al., 2020; Yadav, 2023) and risk management (Szlávik & Szép, 2023).

All businesses are artificial persons under the law and can be considered as viable systems. They employ executives and regulate operations in order to service customer stakeholders. As such, their operations are all performed within a controlled environment. Organisational operations are carefully planned, and the business bears some responsibilities for all of them. Gen AI has already produced tools that have fundamentally altered our attitude to work and businesses (Al-Debei, 2024; Baijens et al., 2022; Bhisikar, 2024), living with AI (Floridi & Cowls, 2019), raises questions about AI regulation(De Streel & Alexiadis, 2023), law (Peng et al., 2021), globalisation (Weber, 2021), and co-operation in international law (Toohey, 2021). Although the Hobbesian Leviathan is distinguished in its description of the human personation of institutions, it is weaker in the personation achieved by automata. To overcome this, a second proposed adaptation comes from the early phenomenology of Martin Heidegger (Heidegger et al., 2010) – which allows us to explore the ontological nature of the artificial persons and the generative AI tools as they work and are operated. The paper then presents some examples of artificial persons at work, noting where in their activities they can be interrupted for the purposes of managerial discourse and control.

Finally, the late philosophical language games of Wittgenstein (1965) are introduced to address the way language is being used by and around the Generative AI tools of the 4IR, and to offer a glimpse as to how language and how ways of life are being changed as a consequence. Such language games can range across and absorb the full range of topics that arise in the 4IR and can be applied in either a fast manner (using digital or generative AI means) or in a slow manner (by considered discussion among significant stakeholders). The primary purpose of these language games being to measure the behaviour of an artificial person at work, against its agreed social contract. The use of these games could be invaluable for business analysts in helping to understand systems of the 4IR and how they can best serve an institution.

2. The viable system as an artificial person at work

The Viable System Model (Beer, 1967, 1972, 1994, 2007) was developed over the course of what has been called the third industrial revolution – the digital revolution in communications, semi-conductor technologies and industrial processes that had been underway since the 1950s. During that time, it has been applied to industrial (Beer, 1972; Espejo, 2022; Espejo & Harnden, 1989) and national systems of management and successfully employed in hundreds of settings.

Classic VSM is a 5-system approach to managing a viable system. There is a top-level management structure (in square box at top), which houses three systems (system 3, 4 and 5) for management of the "here and now" within a VSM (system 3); the outside environment and issues of time, "outside and then" (system 4), and "the sovereign" system 5 (which finds an accommodation between systems 3 and 4. Directly connected to system 3 are systems 2 (which efficient ensures bureaucratic norms are followed in assigning orders) and system 3* (which sporadically audits VSM activities in system 1). The system 1 (the two managed spaces in Figure 1) lies below the management box and to the right of the environment. The environment, shown on the left, shows specific environmental spaces, a number of overlaps between them, wavy lines for relations between them, and domains that cover both space and time.

In any System one space of management-operations-environment, a new level of recursion can be introduced, where management, operations and use of resources are nested within the structure and delegated one level down, managed locally, with its operations being monitored from the higher level.

Beer (2007) provides a close look into the scaffolding surrounding any system 1. Figure 2 shows how any system in focus (here M1, its operation space and link to the environment) is scaffolded and cybernetically controlled in the here and now (system 3) using: organisational bureaucratic procedures provided by the organisation (system 2, A-E). The cyberneticist seeks from management a list of management intervention rules (R1 – R5) which intervene when operations stray to far from expectations, the allotted

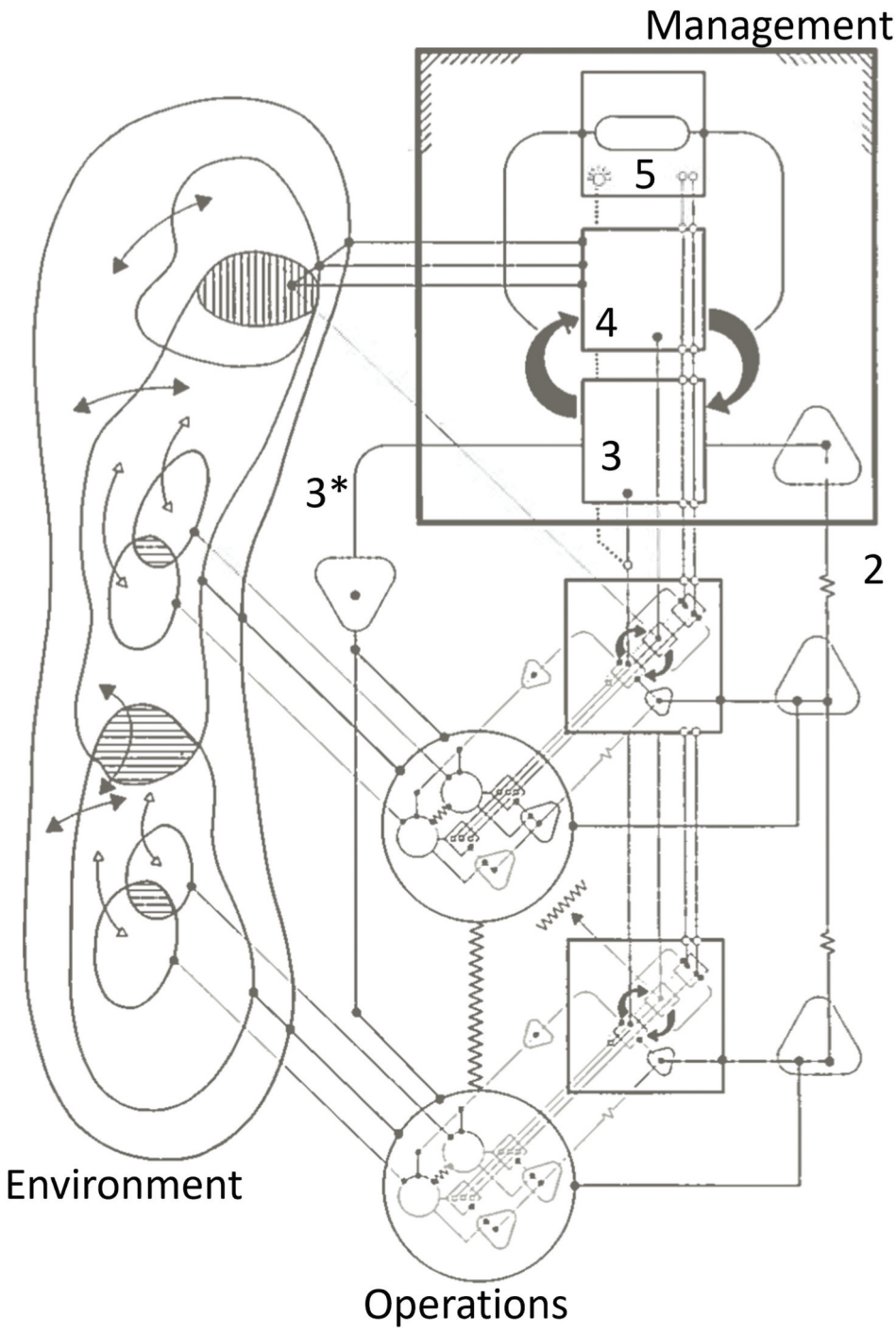

Figure 1. Stafford Beer's classic 5-systems model of the viable system. (This diagram is an adaptation of Chart One, "The Viable System in Focus" used by permission (Beer, 2007))

institutional resources agreed from management (P1 – P5), the range of sporadic audits of business activities (System 3*, V-Z), and any specific bureaucratic means of normalising operational activities for the VSM. With these provided, the Cyberneticist can set up lines of communication with senior management, enforce expectations and allow the system to participate in resource bargaining in special circumstances.

As a consequence of showing how the VSM can be subsumed in Hobbes, Leviathan, we become able to associate a social contract with any viable system and consider it as it operates as an artificial person at work, opening up its personhood to monitoring and bureaucratic interventions from other stakeholders in society at large. It is interesting to note how Beer expanded this VSM even to manage a country's economy (Beer, 2007) and how it was used Chile (Medina, 2014).

2.1. Problems that arise with classical VSM in the 4IR and the need for discourse

Key problems with the Classical VSM as a cybernetic management tool fit for artificial persons of the 4IR include:

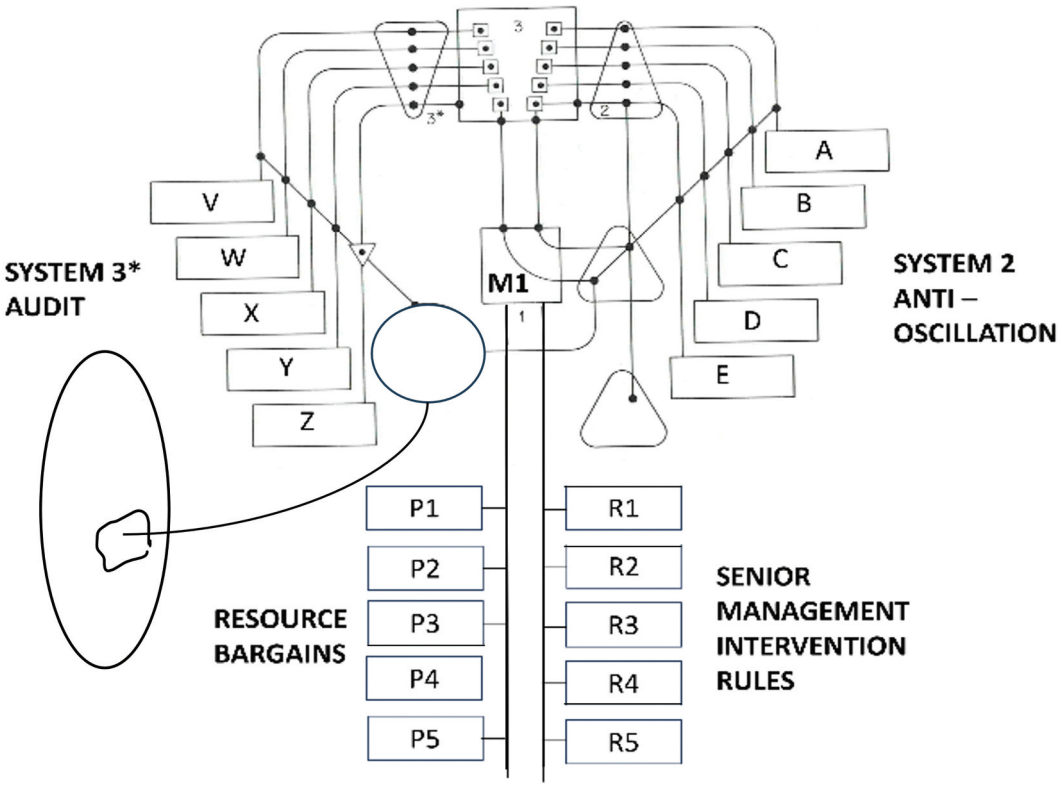

Figure 2. The viable system model and its organisational scaffolding. (This diagram is an adaptation of Chart Three, used by permission (Beer, 2007) showing system 2, 3*, management intervention rules, resource management, and link to environment)

(1) The cybernetic decision-making is centred around the actions of the VSM systems 3, 4 and 5 This approach was effective during the 3IR, but becomes problematical with the creation of generative AI tools which have significant or even total self-autonomy – thereby directing the management level across the operation space, leaving the tool partially, or wholly, to its own devices at work in its reachable real-world environment. There are also different implications for internal company use of a generative AI tool, and the provision of such a tool to be operational in the external environment. Issues here surround responsibility for actions, and organisational contact with the tool.
(2) Beer's approach to the external environment is that it is elsewhere from the internal operations of the company, and ranges across the domains of space and time. This approach, although concise, is problematical in the 4IR in space (system 3, here and now) and time (system 4, outside and then) and the organisational relationships with stakeholders and collaborators. We also see situations where the specific time-characteristics of the operational environment are crucial to operational behaviours: e.g., in interacting with someone before, during or after an election.
(3) Viewing the environment from the operational space, we note that many tools of the 3IR are noted for conquering both space and time. Activity from the operations space of a viable system at work in the 4IR can achieve near instantaneous world-wide reach and can exert magnified manual and intellectual effort in places near and far. The artificial person needs to be recognised as an actor in the reachable real-world environment it works within and across.
(4) As Viable Systems operated in 3IR, there was no need to monitor the behaviour of an organisational AP in the external environment, either as it changes the world around it, or as it pursues resources in order to continue to function within the limits of its viability. As environmental impact rises in importance, and as the relationships between artificial persons and human citizens develop in the 4IR, this is no longer a tenable position.
(5) Any VSM with access to company data necessarily is being trusted with the intellectual property of the client agency it is working with. As soon as that access is achieved by any agent at work for an organisation, it becomes important to monitor the integrity of behaviours of the Viable System at work along the lines of its intentionality and the bounds of its authority.

Some of this may need to be done from higher level societal institutions, or wider societal stakeholders, than just those from business communities.

(6) Integrity is also of concern where there may be pooling of information from, potentially, many millions of presentations of the tool which are active in circulation, each tool being able to be time-managed and applied to many different tasks in the real-world. The opportunities for unscrupulous business practise mean that unscrupulous data-sharing practices need to be envisaged, addressed and then protections put in place to avoid them.

(7) There is no bureaucratic mechanism within Beer's VSM for accommodating the system-2 bureaucratic intentionality of the prescriptive agent with the bureaucratic intentionality of other agents which it must interact with. Resolving such matters will require contemplation and accommodations to be made.

(8) From the VSM perspective, an entity once sold becomes the property and responsibility of the new owner. The producer has no responsibility for the external lifetime actions of the product, excepting where a clear production fault is determined. Use of the product becomes then the responsibility of the owner. Passing along all responsibility for any human-like activities of a pre-trained generative AI agent to a customer is not liable to be acceptable to wider societal stakeholders, customers, nor even marketing strategists within the providing organisation.

Our task here is to identify viable systems as agents in society, operating in a reachable real-world environment, and as entities which can discourse on both their relationships with the parent institution, and their behaviour in the world around them. Once discourse is possible with viable systems of the 4IR, monitoring of such systems by means of language games will be discussed in the section: Fast and Slow Language Encounters with Gen AI Agents in the real-world.

3. The VSM as a hobbesian institution within leviathan

Hobbes book (Hobbes & Macpherson, 1985) is subtitled, "the matter forme and power of a commonwealth ecclesiasticall and civil", of "a commonwealth, or state, which is just an artificial man though bigger and stronger than the natural man, for whose protection and defence it was intended". Hobbes posits the notion that man is capable of creating automata that can be considered, by art, to have an artificial life, and that, similarly, by art, a state can be recursively organised, as an artificial person, with institutional functions, all with a distinct social contract. The state, known as Leviathan, or Commonwealth, is an artificial man (noted here as person), which is personated by a sovereign. The sovereign is in control of this artificial man and insists, for all citizens of the commonwealth, upon a social contract that each natural person agrees to as they become a member of this "artificial man". The contract describes the civic rights, roles and responsibilities attendant upon each as citizens of the state.

Each state function is institutionalised as a lesser artificial person, personated by someone in command, who is empowered with a domain of influence, resources, tools, a theatre for execution, and prescribed actions of intervention, all defined institutionally.

Leviathan mandates that all functions of the state be instituted and managed, as lesser artificial persons, within the body of Leviathan. Each of these recursively embedded mini-leviathans being institutionalised to address a smaller set of intentional goals, and a smaller remit and set of resources. Any sub-leviathan authority can be overridden by higher levels of leviathan in the recursion, and consequently, lower-level leviathans can be controlled and re-organised even as they are in operation.

The value of this arrangement is both in the recursive nature of suborganisations within Leviathan, and in the application of a distinctive social contract to each of its personated institutions and members.

The frontispiece of Hobbes book (Bosse, 1651) shows the commonwealth, as personated by the sovereign figure, (a crowned monarch), whose body and arms are composed of many human heads, all looking up to him. In one hand he holds a sword as the instrument of action and power; and in the other, he holds a staff as the instrument of authority.

Ontologically speaking, the sovereign and the state can be seen as one, with the sovereign representing the authority of the state and the unified will of the people. People performing state functions are performing them in the name of the sovereign. However, the state and sovereign are different too, in such details as their material structure, daily life and means of continuity.

In particular, we note that the sovereign holds absolute sovereignty only while in position. The sovereign wields absolute power and centralises state authority in order to overcome conflicts and maintain order. This absolute authority ensures that all institutions operate under the sovereign's directives. However, in any event where the sovereign is replaced, that diminished person instantaneously holds none of their

previous power and immediately owes allegiance to the new sovereign.

On the left bottom half of Figure 3 are the military institutions of Leviathan (the castles, crowns of monarchs, canon, assorted weapons and means of engagement are also illustrated). On the bottom right, the ecclesiastical institutions of Leviathan (the churches, crown of bishops, tools of distinction, the whole range of tools and the means of operating within ecclesiastical circles). The other primary institutions of the state, such as military, police, ecclesiastical, business, education, etc., are all instituted and personated by delegated leadership, have operational resources allocated, are set to a defined task and allowed to work within limits of authority. The table to the right of Figure 3 shows how any particular business could be positioned similarly within Leviathan.

A Hobbesian interpretation of the VSM allows us to note any institutionalised organisation as an artificial person (an IAP) at work within society. One that is expected to obey the social contract that it inherits as an institution within its field of commerce. Therefore, we note that any institutionally scaffolded viable system can be seen as an artificial person.

Regarding the inner organisation of a viable system:

(1) Where in Leviathan we see Institutional Recursion, such that each sub institution within the commonwealth, or state, is instituted by the sovereign and can be seen as a sub artificial person, similarly we can see how in a particular organisation the system 5, sovereign, institutes the VSM system 1, M-O-R-E – Management and bureaucracy and auditing, of an operation space, which is to fulfil a task.
(2) Where the sovereign delegates duties to monitor external conditions and time related matters; this has a mirror in **VSM System 4**
(3) Where the sovereign delegates duties to operate the organisational functions on a daily basis; this has a mirror in **VSM System 3**, with specific audit functions being applied by **VSM System 3***
(4) Where there is **Institutional Bureaucracy**, the structured bureaucracy established to smooth out the day-to-day operations of the artificial person, there is **VSM System 2**.
(5) As regards the embeddedness of any organisational Viable System within the Commonwealth of Leviathan, we note that Leviathan can impose external forms of monitoring or bureaucracy, on top of the system 3* audit activities and the system 2 bureaucratic activities, by means of the social

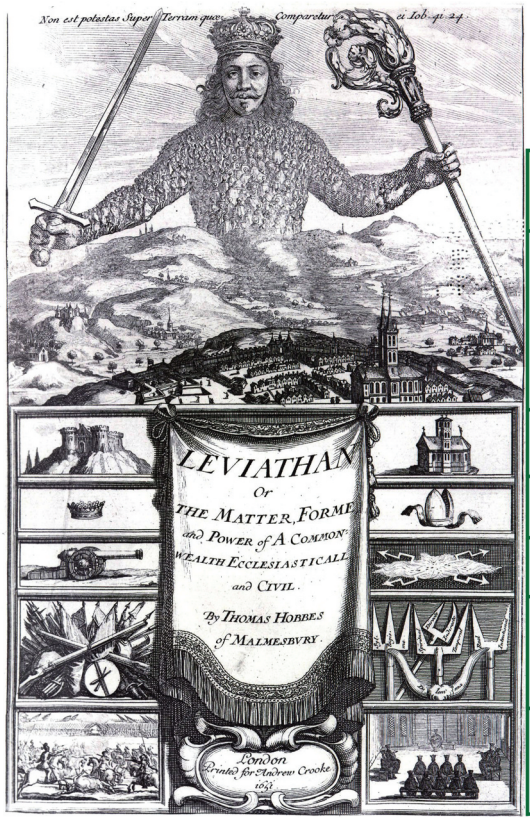

(Social Contract in Brackets)	Business Matters
Overall – Real-world Sovereign, Contracts, Recursions	Social Contract for any business in Leviathan
Home (H)	Business Address
Sovereignty (S)	Chief Executive Officers
Key tools (KT)	Business Weapons, Tools, Skills
Combined instruments (CI)	Articles, Memorandums, Tasks, Contracts, Rules, Sales, Covenants
Action Spaces (AS)	Places of Agency, Set Tasks

Figure 3. Diagram showing frontispiece of Hobbes Leviathan and the social contract that defines any business as an artificial person.

contract, on to any organisation that is working within the Commonwealth. This feature makes it possible for democratic measures to be applied to organisations which use advanced tools of the 4IR.

When a state employee performs any institutional duties, they are essentially personating the state. Similarly, a contracted company employee personates the institution to which they are under contract, as a professional artificial person at work. Via institutionalisation we can agree with Kane's three forms of Artificial Person (Kane, 2018):

> An Institutional Artificial Person (IAP) (as a viable system), a professional under contract at work (PAP); any algorithmically created Generative AI agent institutionalised and scaffolded to perform a professional purpose as a viable system, can also be considered an Artificial Person, which Kane designates as an Algorithmic Artificial Person. (ALAP)

Although our interest here is with ALAPs, we also note that any institutionally scaffolded cyberphysical system (such as a near-autonomous robot or a transportation system interacting with elements of a smart-city) employed for a professional task can be considered a cyberphysical Artificial Person (CAP). We also note, with the emergence of word-to-action Generative AI devices, that modern ALAPs have the capacity to instigate external actions in the real world, and then to use feedback from those actions in its chain of thought reasoning process. As such, the ALAPs of the modern world can now direct and be part of CAPs at work. All of these issues can be explored in the adapted VSM that is proposed here.

As noted in point 5, above, any business has an agreed social contract with the state, and therefore with the other institutions of the state, and is subject to the strictures of that social contract. Maintaining harmony between a state's internal institutions will be a key element of the 4IR, and work on the relationships between the social contracts will be essential.

An example of which would be monitoring of a company service provided by a social media company to influence elections (Kane, 2019). Democratic institutions trump business institutions at this time, and external interventions, such as those provided by the European Union (Haßler, 2021) are examples of externally imposed bureaucratic and monitoring procedures. As before, all of the Artificial Persons at work and their behaviours can be positioned and referred to their social contract with both state and employing organisation (Brodie et al., 2019).

In strictly relating the recursive actions of the VSM with the recursive actions of Leviathan, we can associate an expected social contract for each artificial person that is at work within a Viable System. This ability to ascribe a social contract to an ALAP, such as a generative AI agent, makes it possible for us to anticipate expected behaviours of even black-box AI agencies, and, where necessary, guide them.

4. An ontological approach to artificial persons at work

While, in his introduction to Leviathan, Hobbes ponders why we may not say that all automata have an artificial life, he provides no detailed means of justifying the possibility. We live in an extraordinary age where Generative AI agents do imitate human excellence very well. In order for us to ascribe agency and responsibility for artificial persons at work, we approach the difficult question of the "being" of such viable systems in the world. Heidegger et al. (2010) offers an approach to this problem. In Heidegger's phenomenological approach to being in the world, the placement of a being in its environment is crucial to its being. From a human perspective, Heidegger denotes three ways of being:

1. As entities as they are first encountered, seeing them in a methodological process

(I) Firstly, by being heedful of the entity in the environment
(II) Then being aware of its being-at-hand
(III) Then being aware of any being-together-with it has
(IV) Then developing awareness of relevance-to with it
(V) Then developing awareness of seeing it in reference-to others
(VI) Then developing awareness of a sense of any what-for that it could perform
(VII) Then developing a sense of its significance
(VIII) Then ascribing to it a level of handiness for a purpose

This mode is shared by both humans and institutional Artificial Persons (IAPs). The next stage of encounter is with handy elements in a specific environment that can be employed as tool-beings.

2. In this space previously discovered handy elements in the environment can be developed into tools and then used to uncover interesting issues about the world, about the tool and about the tool makers and users. Heidegger's early phenomenology thought of humankind as toolmakers, who discover themselves through their use of tools. This involves

(i) The setting of a stage for preparations and usage

(ii) Reference of tools appropriate to task
(iii) Engagement with tools for production task
(iv) Evolution of use of tool over time

The creation of tools and their deployment for different purposes in the world, again, is something both humans and IAPs can do.

3. Lastly is the level of human being, which is able to detect the beings of the world and participate in the creation and use of tools and thereby to explore the worldliness of the world.

In this approach to being, the human is highlighted as a tool-making being who engages with the environment through tools, and in doing so, learns more about themself and their world. Heidegger also denotes the human being as an existential being. Heidegger noted core concerns of an existential being as:

(1) Taking Care of itself – with an acknowledgement of death
(2) Projecting itself into a desired possible future
(3) Taking Actions – to use things for purposes in the world
(4) Relating itself to Time – its historicity, its reliance on time, the preciousness of time.

And again, this is shared with institutions.

In Figure 4, the IAP is shown as a level 2/3 being, a tool with human characteristics, alongside the level 3 being, in its working environment as their natures compel them to operate in a similar way. We note that an ALAP or other automated viable system, such as a CAP, are embedded further in and must similarly be scaffolded in their activities by an IAP.

Figure 5 shows these three ways of being in the world, for a natural and institutional Artificial Person. The lower arrows show how environmental entities become business resources – and there is a focus on how a natural person becomes a resource of the company and is employed as a PAP. Similarly, how an environmental entity can also become a level one company asset.

The top arrows show how the Artificial Person uses resources, applies tools, and then affects natural person, customers and the environment. This double umbrella of input and output activities show how any form of artificial person is scaffolded and lives in its reachable real-world environment.

4.1. A particular day-shift as an artificial person at work

If we consider the operation of an institutionally defined day-shift at a health centre: the shift is a managed Viable System: it is scaffolded, contractually defined in scope, takes place in a range of set environments, from a start time till an end time, and has at its disposal specific resources that are required to meet the contractual requirements of the service. Its resources are those areas that are necessary for workplace tasks, all of the supplies that may be called upon in running the shift, any professionals or ALAP or

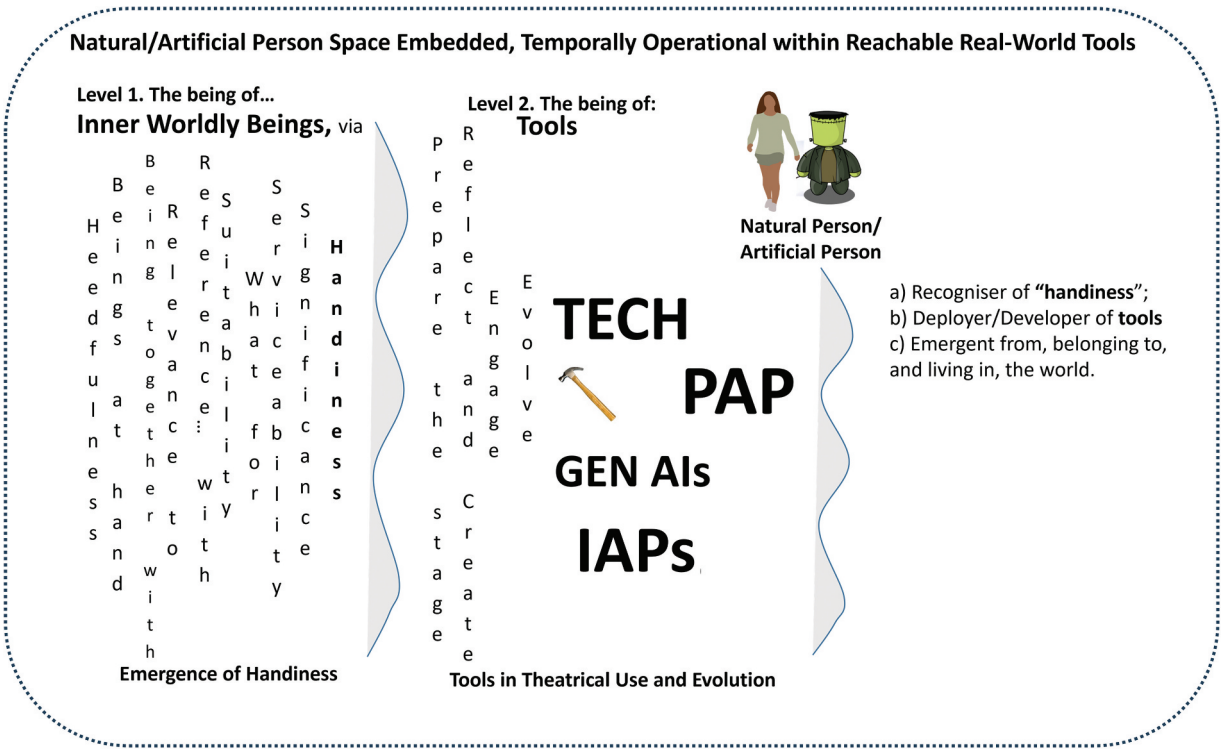

Figure 4. The ontological placement of an artificial person in a workspace.

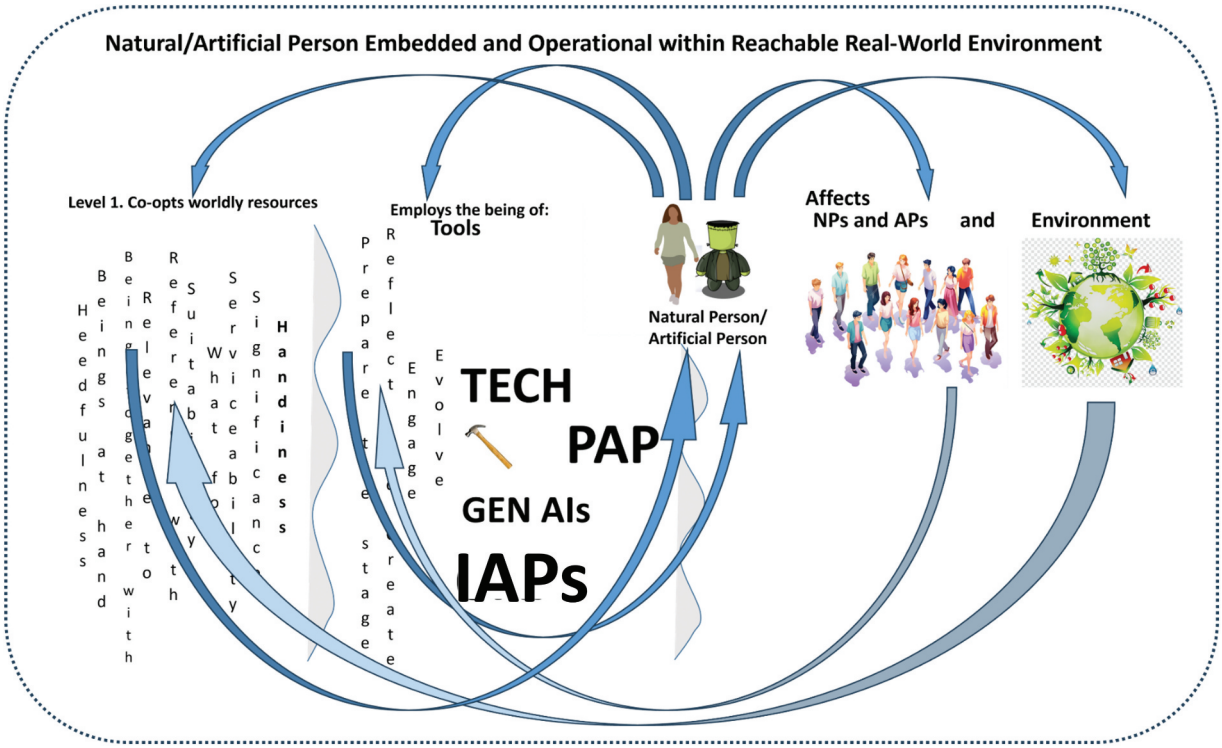

Figure 5. Double umbrella of natural and artificial persons at work with resources, tools and environmental agency.

CAP items that may be called upon to do work. The shift may have access to a number of ALAP service providers, providing patients with triage, a level of medical consultation, feedback on their condition, and any number of counselling and bereavement services.

This Viable System is an intentional Artificial Person at work between the set hours, performing tasks in an orderly manner based on the organisational instructions given, following contractually agreed internal business-as-usual procedures within the organisational controlled environment. The running of any specific shift with its unique circumstances represents the life of a unique artificial person which comes into existence in setting up for the performance and comes to the end of its existence when the shift is completed, and salient details are recorded.

As a consequence of running the shift, some changes are made to people who are affected by operations performed in the shift, and some environmental changes are made internally in the organisation that may also impact externally.

Consider the scaffolding of an ALAP within the shift, which, for example, provides a carefully specified level of bereavement counselling to patients within the time-window of the healthcare shift. Operational tools within the shift respond to queries from patients concerns, and direct appropriate patient candidates to a specific counselling session which is designed to provide a prescribed level of support in addressing the patient's concerns. As with all LLM interactions, questions and responses are generated and can be captured and time-stamped. Notes also of any escalations of service can be recorded.

This bereavement counselling service is a pre-trained, black-box, Large Language Model (LLM) generative AI tool, with a number of features to note. The LLM is built upon a specific Foundation Model, on top of which, it has been pre-trained. Training is provided, first of all at the base level of the foundation model, and then as is required, via prompting devices, to direct the counselling service tool in an appropriate manner to the task in hand. Pre-training will offer boundaries of scope, help with specific tasks, access to important documents related to the counselling service, timetable, and instructions on what to do in various forms of emergency situations. The sum total of this prompting, form the intentionality and conditions of the institutional social contract which the tool has been created to fulfil. Management of activities can be guided by prompting, and the Generative AI tool can now be considered as an ALAP at work, as in Figure 6.

Here, shift resources (level 1 beings), and shift tools (level 2 beings) are made available to the prescriptive agent, which operates in a black-box manner on the resources and tools available to it and produces outputs that affect both natural and artificial persons in the world, as well as the environment. It is always possible that affected outputs can become new elements in the resource and tool base. Note that the prompting service on the Generative AI tool is the only method of managing the tool's behaviour within the artificial person at

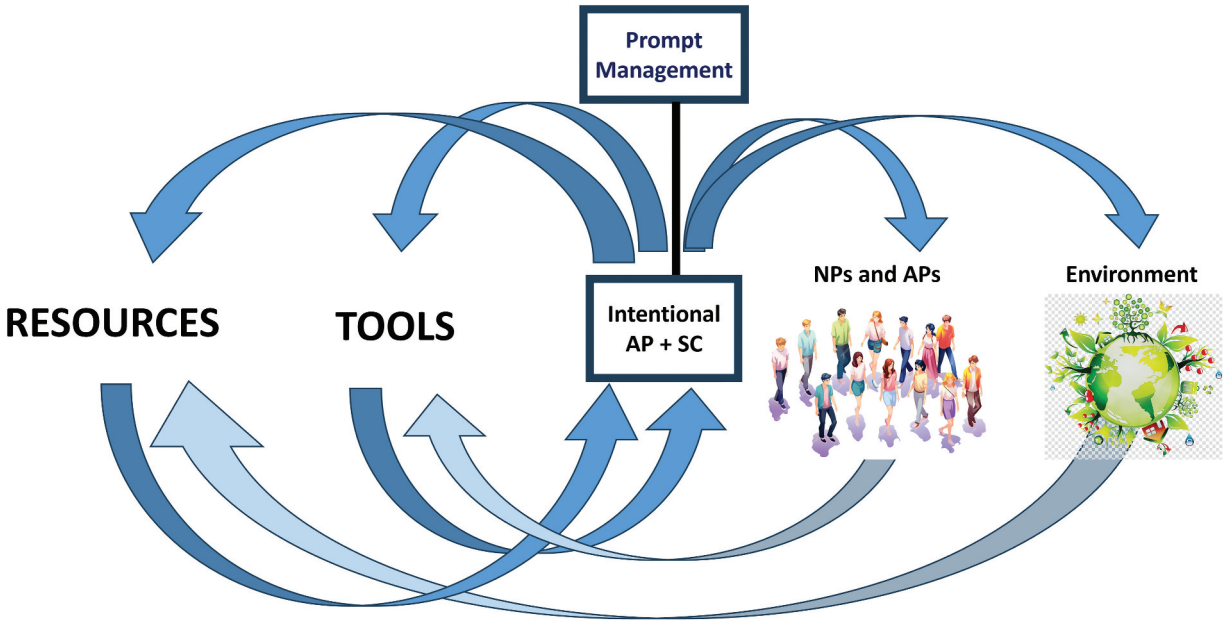

Figure 6. Environmental activities of artificial person at work, showing relationships and management prompting.

work. This can be recognised from within the organisation as in Figure 6. Note that the Generative AI tool is not an artificial person at work: it is the viable system in which the tool is placed that is the artificial person of our concern.

Heidegger's ontology of being helps us to define the phenomenological characteristics of an autonomous or partially autonomous artificial person at work in the world. In order to address the cybernetic details of autonomy, control and behaviours in the artificial person, we need to combine the digital activities of the VSM business tools with the ontological phenomena of the Artificial Person at work. To do so, we need to see the AP as a professional at work in a staging area. That artificial person has a clear structure, even though it may house many black box elements, and, importantly, has significant points of contact where communications and control can be affected. Figure 7 shows the VSM of Beer extended with the three key proposals of this paper: a means of societal stakeholders to contribute social monitoring (SC-M), a means for societal stakeholders to provide expected behaviours (SC-B), and a means of embedding a generative AI tool into the framework of a viable system, whereby its reachable real-world is explicit, its activities are open to these system 2 and system 3* activities, and its actions are open to management prompting.

The provision of resources and tools is made within the reachable-real world environment of the AP at work. With our example of the shift in the health centre, the Intentional AP at work pursues its tasks prescriptively. If something untoward takes place, there is a need for resource bargaining with the higher level of its organisation that can be done through M1, and bureaucratic scheduling and monitoring from the parent organisation is completed as before. The Viable System of the healthcare organisation using the tools is extended to have higher-level Social Contract monitoring (SC-M) and Bureaucratic means (SC-B), as a consequence of medical ethics, from agencies who have a societal requirement to be involved in monitoring the actions of the AP at work, and also perhaps in altering how they are performed in society. As professionals are trained, it may also be an opportunity of involving them in engaging with a trained ALAP at work, or even offering classroom links with such tools, as with educational links that seek to prepare students for real-world jobs in society (Kane, 2014) in order to widen societal involvement and understanding.

Our final step is to address the real-world behaviours, and the memory of behaviours, as digital movements of the Artificial Person at work. As with all business agents, the management requirement is that we expect the autonomous Generative AI agent with chain of reasoning capacity to keep a journal of company actions based around the situations it engages with, the tools it employs, the actions it takes, and the outcome achieved with respect to its reachable real-world environment. These details can then be shared with the Management level and acted upon appropriately.

Bringing the ontological space and the digital space together, we map the elements of its communication, control and operational commands, and lay these alongside the actions it actually takes, and the records that are made of the activities (Figure 7).

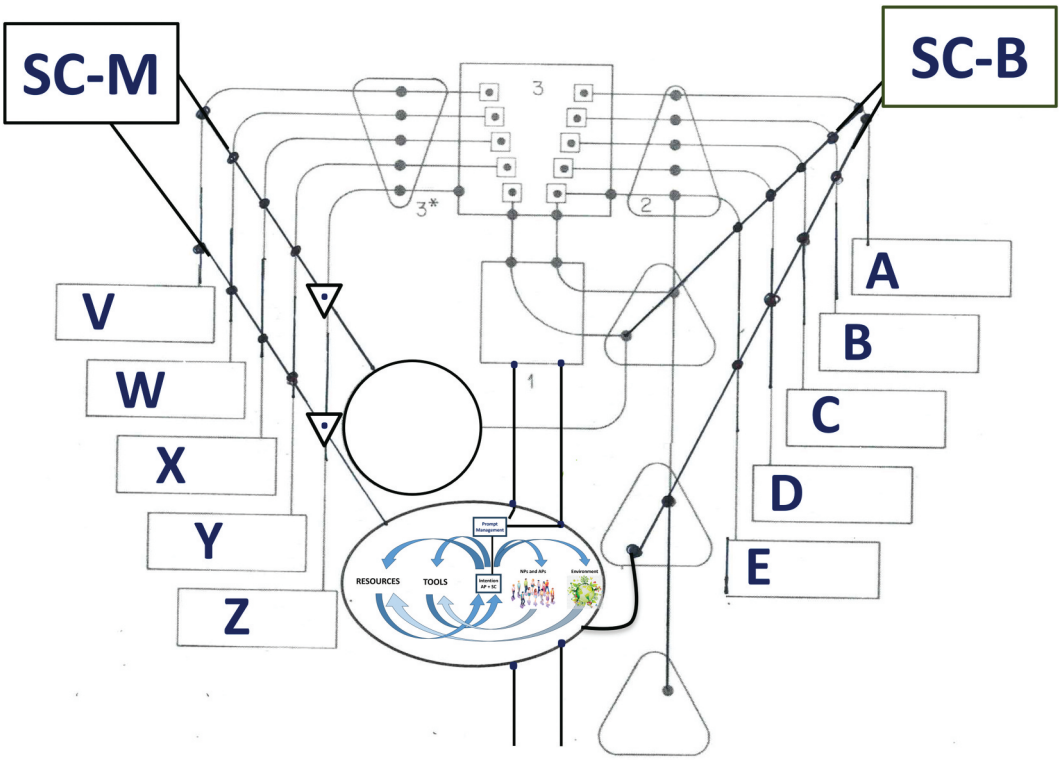

Figure 7. Institutional scaffolding of a generative AI agent in workplace.

Figure 8 introduces a situation space, which describes the noted level-1 beings in the reachable real-world in which the ALAP operates. How well our situation space describes the salient business features of the real-world situation is dependent on our analytical grasp of the salient features of the reachable real-world environment and is an important element of business analytics for Generative AI agents. We also record all tools that are available, and where they are employed as the ALAP pursues its organisational agenda. And the third space, is the recording space of what affects are being made in the world of business outputs, human beings, and the natural environment.

What we now endeavour to do is to expect an ALAP to maintain, and provide access to, a track of

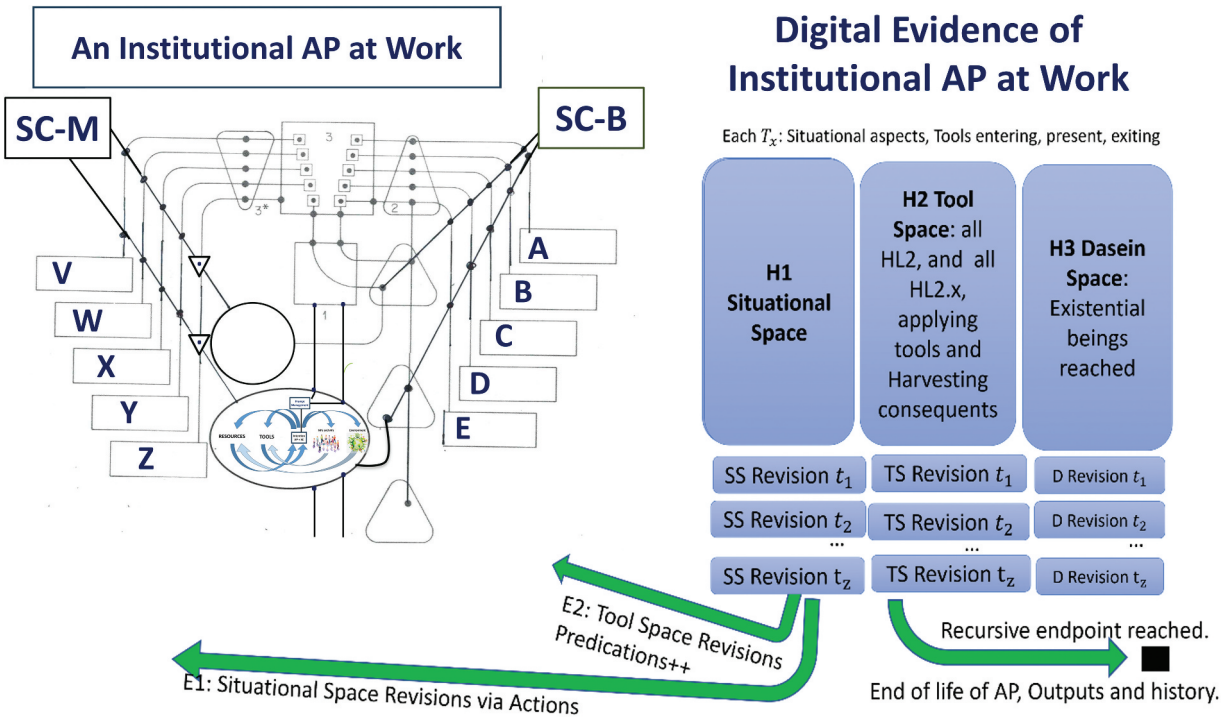

Figure 8. Mapping the VSM architecture to the digital footprints of actions.

all of the details M1 would have been tracking in an operation of the VSM, this involves:

(1) Being aware of all significant situations in the operation space, and tracking movement over time
(2) Mapping progress to expectations
(3) Recording decision-making and the outcomes – particularly unexpected outcomes
(4) Monitoring BAU as viable, or escalating activities as required

What this linking between operation space and environment, and architectural positioning of reasoning and operational decision-making gives us is clarity into the real-world activities of our GEN-AI devices. Furthermore, this diagram makes it clear how the Artificial Person can be interrogated at any point of its activity, and can therefore be open to Wittgenstein Language Game analysis, as discussed in the next section.

5. Fast and Slow Language Encounters with Gen AI agents in the real-world

Wittgenstein traversed a pathway from his picture theory of language (Wittgenstein, 2021), which was instrumental in the development of GOFAI (good old fashioned AI), to his work on the foundations of mathematics (Wittgenstein et al., 1989) on to his work on language and life being closely connected, to the degree that he believed language to be a form of life (Peters, 2022). Our interest in this later work is about how life is being lived in the 4IR by natural and artificial persons alike, and how a shared language of life can be used to engage artificial persons in behaviour altering discourse.

Wittgenstein presented the concept of a language game as part of his late philosophical investigations (Wittgenstein, 1965), which is presented in 693 numbered aphorisms. In PI 1 – PI 108 of these investigations, Wittgenstein introduced the language games, "to bring into prominence the fact that the speaking of language is part of an activity, or a form of life", (PI 23).

Wittgenstein showed how a game can be played between a builder and an apprentice as they use their operational language to build a wall together. In the game, there are participants, each participant has a role, and there is a desired outcome, and much to explore along the way. One way of playing a WLG would be by exploring any interaction taking place, noting what is really happening, and even how the game may change as the building materials become more complex, or the operations become more powerful. In PI 23, Wittgenstein gives a list of language-games in the following examples:

- "Lying
- Giving orders, and obeying them
- Describing the appearance of an object, or giving its measurements
- Constructing an object from a description (a drawing)
- Reporting an event
- Speculating about an event
- Forming and testing a hypothesis
- Presenting the results of an experiment in tables and diagrams
- Making up a story; and reading it
- Play-acting
- Singing catches
- Guessing riddles
- Making a joke; telling it
- Solving a problem in practical arithmetic
- Translating from one language into another
- Asking, thanking, cursing, greeting, praying".

Operationally speaking, a Wittgenstein Language Game:

- Is focused on some specific reachable real-world environment, there are materials involved in the game, and actions being taken alongside the communications.
- The game imposes some restrictions on the resources that can be used and possible movements and operations a player may make in the game by expecting players to follow game Rules and Regulations.
- A player of the WLG is an actor in the game, and while playing can be regarded as an Artificial Person within the game.
- The game offers Scope for the Display of Brilliance and Creative Behaviours across the playing space within the scope of the rules provided.
- Player behaviours could be monitored by a referee, to legitimise moves, disallow certain behaviours or settle disputes. Any referee inserted in this way becomes a modifying player in the game and is performing an audit function (system 3* in VSM).
- Expression in the game and the rules of the game can be expanded or contracted by evolution of the game as a consequence of games played.
- The game is ended when the task is completed, or aborted, or the allotted time has expired.

5.1. The role of WLGs in business analytics for 4IR

As each operational level of a company has its own language, its own resources, its own tasks to perform, and its own particular circumstances: therefore, each operational level of a company has its own language and language games. The use of WLGs in an organisational setting can explore the recursive nature of organisational activities, the use of resources, applying procedures and producing consequents. Large questions begin to present themselves when we consider situations where an organisations ALAPs and CAPs can link, co-operate, or be unco-operative, with other Artificial Persons encountered on the Internet of Things (IoT) systems, in smart-city solutions, third-party industrial and domestic robotics, communicative medical devices, deep data-mining tools, artificial intelligence devices, near-cognitive systems, autonomous and semi-autonomous transportation systems. The nested recursion within IAPs requires that certain resources must be shared between multiple activities over a managed period of time. These resources include professionals at work, devices, software, data elements, generative-ai software services, and cyberphysical systems. Exploring the consequences of this can be done through direct contact with all artificial persons who are aware of both their intentionality and their social contract.

Our key concern with Wittgenstein Language Games (WLGs) is in providing a management discourse with ALAPs at work, through resource bargaining, system 2, system 3* and direct management interventions where necessary, in order to:

(1) Use professional and societal input in the design of appropriate ALAPs for industry
(2) Anticipate 4IR situations that are liable to arise and to prepare for them
(3) Provide a means of recalibrating the actions of ALAP in the design phase, or in the deployment stage.
(4) To seek to reconcile the actions of the ALAP at work with the actions of other societal actors it interacts with, therefore addressing societally accommodations with other societal institutions and agents.

The steps of the managed shift in the healthcare setting:

(1) Accept Patient submission details from Shift Scheduling Service
(2) Identify contact with Prompt entry node with the Session assigned to a patient
(3) Bring up the Patient's Health Records to be used in the LLM consultation, enter these through Prompt to focus LLM on this particular patient
(4) Run The session with the Patient
(5) System 2 work on the running of the session, the Bureaucratic element, entered through occasional or continuous prompting, as required
(6) System 3* work done on the monitoring of the running of the session and changes made in the environment patient's space and medical treatment space, and medical records space. Performed by means of continuous monitoring of outputs of service.
(7) Termination of service by by completing the transaction to the patient's satisfaction, or by handing patient onto other patient treatment service within NHS. Records kept for patient's record and for monitoring session integrity.

The language games can be used to draw out and discuss new opportunities in business analytics (Al-Debei, 2024; Bhisikar, 2024; Davenport, 2018; Tutun et al., 2023), issues of the dark side of technology (Heidegger, 1996; Kane, 2019; Tarafdar et al., 2013), questions of organisational leadership and management (Boddy, 2006; Conger, 1990; Linstead et al., 2014), deployments of artificial intelligence (Cheng et al., 2022; Linstead et al., 2014; Mikalef et al., 2022) and discrepancies arising between black-box intentionality and observed behaviours. To these we could add any relationship between the Gen AI agent and any of its stakeholders, as shown in Figure 9, particularly as they relate to the themes of sustainability, disruption, ethics and risk management.

As for example software being used in numerous fields, and data-gathering in each while operating for different purposes in each. As for instance with governmentally contracted AI services running across healthcare services and policing.

We could also reasonably expect a language game to:

(1) Help in defining ontological and quasi-ontological characteristics of different forms of Artificial Persons as they interact, compete or synchronise, and situations where shared resources may affect more than one organisational project simultaneously
(2) Help in questioning assumptions at key points of decision-making in order to separate out meaning from use of language for a purpose.
(3) Investigate Explorations of being-in-the world for environmental, human, societal, and cyber-physical systems.

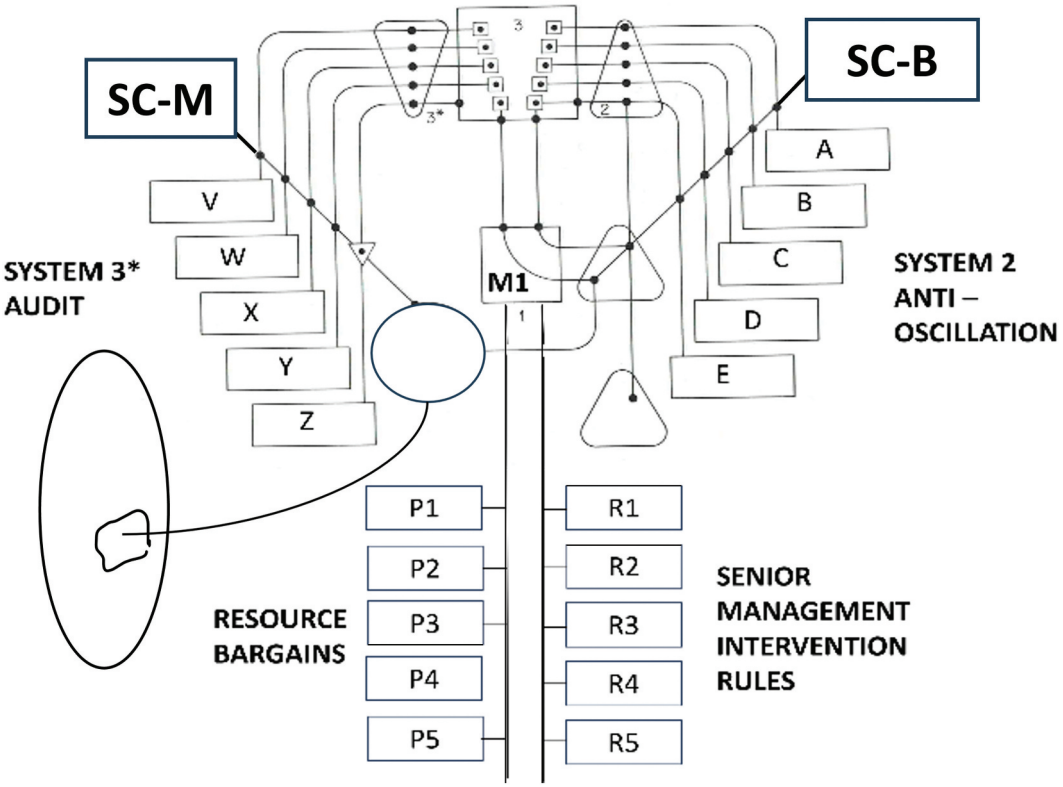

Figure 9. The viable system model plus internal and external stakeholder monitoring and bureaucracy.

(4) Help in defining where mistakes have been made, and what reparations should be made as a consequence.

We can see that for each level of operation of the artificial person in a workplace that there is a more refined and restrictive definition of the specific task that is to be performed in that setting. We also see that in the same operational space there are many others working, and many other stakeholders who may be affected by our activities, but who are not directly involved in what we are doing. Exploring the consequences of cramped and resource-restricted working environments could also be a valuable language game.

As a consequence of seeking accommodation between these stakeholders, we can weigh their rights against each other by way of the social contract afforded each, against their operational intentionality. Wherever a discourse and accommodation needs to take place, we can do that with respect to a number of different forms of social contract that each holds at different points of the operational environment for different stakeholders. We note three forms of societal accommodation that are possible:

(1) Hobbesian Contractarianism (Hobbes and Macpherson, 1985) recognises that the highest authority that is present has the authority to resolve the situation between the stakeholders
(2) Rawls (2003) introduces rules that operate from behind the veil of ignorance, where various scenarios are hypothesised and rules are created for all actors that are impartial and are seeking to serve the greater good. This is still a form of contractarianism, though one where a more societal sweep is allowed.
(3) Scanlon's Contractualism (Scanlon, 2000), recognises each agency present as one with equal moral agency. And so, from a societal perspective, we see a state-defined contractarianism working hand-in-hand with a societally approved Contractualism, seeking to find accommodation between different artificial persons at work in a societal environment.

The subtle distinctions between the different forms of social contract and the ability to bring the WLG into the activities of an artificial person at work, to address any clash of stakeholders, makes it possible for us to participate in moments of import to address black-box behaviours at those times, and consequentially, to be able to govern the behaviours of artificial persons at points of emergency. Our task now is to find the points of engagement during moments of importance – which we can do by further examining the organisational structure, and the position of a CAP within it.

Once we have reached this space, we have introduced points where we can engage in fast and slow discourse with the CAP at work. The business intention of any CAP is defined through the social contract

and business contract that the CAP is engaged in. Through analysis of affects in the behaviour space, we can monitor all elements of activity and all changes made to the real-world across the time segments from the beginning of the operations, to their conclusion.

If sufficient elements of memory to describe the situations encountered, tools used, and outcomes produced throughout its working life are built into an artificial person, it becomes possible for business management to interrupt the flow of activities in real-time to question activities. Such high-speed activity, potentially via a form of continuous prompt engineering, would be fast discourse with the artificial person at work. Where we can be more reflective of the of the Artificial Person at work, via human speed discussion, this would involve slower, human speed discourse.

6. Discussion

Firstly, we have positioned the whole of the VSM inside the context of the Commonwealth of Thomas Hobbes. This allowed us to associate artificial personhood, social contracts and societal obligations on Viable Systems. We noted that, although Hobbes was successful in articulating the ontological issues of a human personating an institution or state, he was less so, in addressing the ontological nature of the person-like automata with human-like characteristics. This paper introduces a new means of acknowledging and engaging with the artificial persons which exhibit human characteristic behaviour via generative AI technologies.

This ontological approach sees Generative AI Agents embedded in Artificial Persons at work in their reachable real-world environment. The methodology allows each individual ALAP that incorporates Generative AI agency to be envisaged within a Heideggerian lens and therefore explored along the boundary of tool-being and human being.

Finally, as a consequence of unfolding the actions of an artificial person at work over time via its digital extension, we are able to question its actions at different time points through its life history, or through its preserved memory. With the use of Wittgenstein language games, we can create a game of any number of interacting artificial persons, associated with their social contracts and intentionality, and interrogate any of them as they operate, or engage them in reflection on past actions. Characters in such a language game will be from within the Viable System, but importantly, also from other parts of society, which may have a compelling social contract to be observed.

WLGs can be used to explore any business as a quasi-ontological being with a clear relationship with time, and existentiality. It is worth noting here that the blurring of distinctions between natural and artificial persons has already had a significant impact on humanity as well as on the natural world around us (Murray et al., 2021).

What is true for both a natural person living, and an artificial person at work, is the concept of the environing world in which they operate. In order to pursue the environing world as an object of analysis, we need to allow for the significant circumstances of the environment to be included in the social contract and game rules of a WLG to explore predications as attached to details of the environing world. The double umbrella of Figure 4 allows us to pinpoint key areas of intervention and discourse. The dangers of uncontrolled technology treating all elements of the real-world as standing resource was explored by Heidegger (1996), and modern scholarship has seen a Heidegerrian approach to the environment (Rentmeester, 2016).

This approach taken in this paper has re-imagined the VSM for use in the 4IR, by associating with its classic format together the contributions of three profoundly significant philosophers – of society, of being, of language. The extended VSM offers to business analysts of the 4IR tools to deploy and explore even the most marvellous of generative ai agents, while they are at work within viable systems, or societal artificial persons, and are obeying a contractual agreement to perform intentionally or prescriptively, within a specific real-world environment.

7. Conclusion

This paper has proposed a set of management tools for business analysts as they support business organisations which employ cyberphysical systems that are Gen AI enabled. If an organisation keeps appropriate tabs on its Gen AI systems, it will at have means to develop systems and address real-world actions appropriately.

The tools presented dovetail with the notion of a national social contract, as provided by a national government, for the benefit of natural and artificial persons who are living or operational in a state. The object of the exercise is to first of all help businesses, natural persons and governments to share an appropriate platform for discourse with ALAPs and CAPs as they go about their business.

The tools are focused on the behaviours of artificial persons operational in the real world and are adapted for business analytics purposes from four person- and business-focused philosophical frameworks: Hobbes's Leviathan, Beer's Viable Systems Model, Heidegger's Phenomenology of Being and Wittgenstein's Language Games.

Whatever comes in the next few years of Generative AI development, it is hoped that business analysts, and others, can be actively involved in a wide, societal

discussion about the business opportunities, the philosophical implications and societal impact of such systems, even as they are working among us.

Acknowledgments

I would like to express my sincere gratitude to the reviewers of this paper. The insightful reviews of the initial submission contributed greatly to the much improved shape it took: both in its central focus as an adapted theory paper, seeking to adapt the Viable System Model for use in the Fourth Industrial Revolution, and also for its use of an extended example. Special thanks to John Green of JBA editorial office for assistance in layout. Regarding the diagrams used in this paper, all diagrams not cited to another author are part of the contribution of this paper.

Disclosure statement

No potential conflict of interest was reported by the author(s).

References

Al-Debei, M. M. (2024). The era of business analytics: Identifying and ranking the differences between business intelligence and data science from practitioners' perspective using the delphi method. *Journal of Business Analytics*, *7*(2), 94–119. https://doi.org/10.1080/2573234X.2023.2285483

Baijens, J., Huygh, T., & Helms, R. (2022). Establishing and theorising data analytics governance: A descriptive framework and a vsm-based view. *Journal of Business Analytics*, *5*(1), 101–122. https://doi.org/10.1080/2573234X.2021.1955021

Beer, S. (1967). *Cybernetics and management* (2nd ed.). English Universities P (Management science series).

Beer, S. (1972). *Brain of the firm: A development in management cybernetics*. Herder & Herder.

Beer, S. (1994). *Platform for change: A message from stafford beer*. J. Wiley.

Beer, S. (2007). *Diagnosing the system for organizations*. Repr. Wiley (The managerial cybernetics of organization).

Bhisikar, A. (2024). Maximising competitive advantage: The role of strategic business analytics framework in business strategies. *Journal of Business Analytics*, *7*(3), 151–177. https://doi.org/10.1080/2573234X.2024.2325703

Boddy, C. R. (2006). The dark side of management decisions: Organisational psychopaths. *Management Decision*, *44*(10), 1461–1475. https://doi.org/10.1108/00251740610715759

Bosse, A. (1651). *Leviathan frontispiece cropped British library*. https://en.wikipedia.org/wiki/File:Leviathan_by_Thomas_Hobbes.jpg

Brodie, R. J., Fehrer, J. A., Jaakkola, E., & Conduit, J. (2019). Actor engagement in networks: Defining the conceptual domain. *Journal of Service Research*, *22*(2), 173–188. https://doi.org/10.1177/1094670519827385

Cheng, X., Su, L., Luo, X., (Benitez, J., & Cai, S. (2022). The good, the bad, and the ugly: Impact of analytics and artificial intelligence-enabled personal information collection on privacy and participation in ridesharing. *European Journal of Information Systems*, *31*(3), 339–363. https://doi.org/10.1080/0960085X.2020.1869508

Conger, J. A. (1990). The dark side of leadership. *Organizational Dynamics*, *19*(2), 44–55. https://doi.org/10.1016/0090-2616(90)90070-6

Davenport, T. H. (2018). From analytics to artificial intelligence. *Journal of Business Analytics*, *1*(2), 73–80. https://doi.org/10.1080/2573234X.2018.1543535

De Streel, A., & Alexiadis, P. (2023). The European way to regulate big Tech: The EU's digital markets act. In D. M. Vicente, S. De Vasconcelos Casimiro, & C. Chen (Eds.), *The legal challenges of the fourth industrial revolution* (pp. 91–123). Springer International Publishing (Law, Governance and Technology Series). https://doi.org/10.1007/978-3-031-40516-7_6

Espejo, R. (2022). Cybersyn, big data, variety engineering and governance. *AI & Society*, *37*(3), 1163–1177. https://doi.org/10.1007/s00146-021-01348-0

Espejo, R., & Harnden, R. (Eds.). (1989). *The viable system model: Interpretations and applications of stafford Beer's vsm*. J. Wiley.

Floridi, L., & Cowls, J. (2019). A unified framework of five principles for AI in society. *Harvard Data Science Review*. [Preprint]. https://doi.org/10.1162/99608f92.8cd550d1

Hall, P., Love, H. A., & Uesugi, S. (2015). 21CW: Norbert Wiener in the 21st Century [guest editorial]. *IEEE Technology and Society Magazine*, *34*(3), 33–34. https://doi.org/10.1109/MTS.2015.2461174

Haßler, J. (Eds.). (2021). *Campaigning on facebook in the 2019 European parliament election: Informing, interacting with, and mobilising voters*. Springer International Publishing (Political Campaigning and Communication). https://doi.org/10.1007/978-3-030-73851-8

Heidegger, M. (1996). *The question concerning technology and other essays*. (W. Lovitt, Trans.). Harper and Row (Works).

Heidegger, M., Stambaugh, J., & Heidegger, M. (2010). *Being and time* (D.J. Schmidt, Ed.; Revision ed.). State University of New York Press (SUNY series in contemporary continental philosophy).

Hobbes, T., & Macpherson, C. B. (1985). *Leviathan*. Penguin boks (Penguin classics).

Huang, K. (Eds.). (2023). *Beyond AI: ChatGPT, Web3, and the business landscape of Tomorrow*. Springer Nature Switzerland (Future of Business and Finance). https://doi.org/10.1007/978-3-031-45282-6

Jaakkola, E. (2020). Designing conceptual articles: Four approaches. *AMS Review*, *10*(1–2), 18–26. https://doi.org/10.1007/s13162-020-00161-0

Kane, T. B. (2014). Using cognitive tunnels in a new approach to building social elevators in the information society. *Informatica (Slovenia)*, *38*. https://api.semanticscholar.org/CorpusID:202098

Kane, T. B. (2018). A framework for exploring intelligent artificial personhood. In V. C. Müller (Ed.), *Philosophy and theory of artificial intelligence 2017* (pp. 255–258). Springer International Publishing (Studies in Applied Philosophy, Epistemology and Rational Ethics). https://doi.org/10.1007/978-3-319-96448-5_28

Kane, T. B. (2019). Artificial intelligence in politics: Establishing ethics. *IEEE Technology and Society Magazine*, *38*(1), 72–80. https://doi.org/10.1109/MTS.2019.2894474

Linstead, S., Maréchal, G., & Griffin, R. W. (2014). Theorizing and researching the dark side of

organization. *Organization Studies*, *35*(2), 165–188. https://doi.org/10.1177/0170840613515402

Lu, M., Gao, F., Tang, X., & Chen, L. (2024). Analysis and prediction in SCR experiments using GPT-4 with an effective chain-of-thought prompting strategy. *iScience*, *27*(4), 109451. https://doi.org/10.1016/j.isci.2024.109451

Medina, E. (2014). *Cybernetic revolutionaries: Technology and politics in Allende's Chile*. The MIT Press.

Mikalef, P., Conboy, K., Lundström, J. E., & Popovič, A. (2022). Thinking responsibly about responsible AI and 'the dark side' of AI. *European Journal of Information Systems*, *31*(3), 257–268. https://doi.org/10.1080/0960085X.2022.2026621

Monson, M. (2023). Socially responsible design science in information systems for sustainable development: A critical research methodology. *European Journal of Information Systems*, *32*(2), 207–237. https://doi.org/10.1080/0960085X.2021.1946442

Murray, A., Rhymer, J., & Sirmon, D. G. (2021). Humans and technology: Forms of conjoined agency in organizations. *Academy of Management Review*, *46*(3), 552–571. https://doi.org/10.5465/amr.2019.0186

Peng, S., Lin, C.-F., & Streinz, T. (2021). Artificial intelligence and international economic law: A research and policy agenda. In S. Peng, C.-F. Lin, & T. Streinz (Eds.), *Artificial intelligence and international economic law: Disruption, regulation, and reconfiguration* (pp. 1–26). Cambridge University Press.

Peters, M. A. (2022). Language-games philosophy: Language-games as rationality and method. *Educational Philosophy and Theory*, *54*(12), 1929–1935. https://doi.org/10.1080/00131857.2020.1821190

Rawls, J. (2003). *A theory of justice* (Rev. ed. 5.-6. printing ed.). Belknap Press of Harvard Univ. Press.

Rentmeester, C. (2016). *Heidegger and the environment*. Rowman and Littlefield International (New Heidegger research).

Sarrion, E. (2023). How does ChatGPT Work? In E. Sarrion (Ed.), *Exploring the power of ChatGPT* (pp. 9–16). Apress. https://doi.org/10.1007/978-1-4842-9529-8_2

Scanlon, T. (2000). *What we owe to each other* (First Harvard University Press paperback ed.). The Belknap Press of Harvard University Press.

Schwab, K. (2017). *The fourth industrial revolution. First published in Great Britain by portfolio*. Portfolio Penguin.

Szlávik, J., & Szép, T. (2023). A framework of risks in the context of industry 4.0, related to sustainability. *World Futures*, *79*(3), 406–429. https://doi.org/10.1080/02604027.2021.2012875

Tarafdar, M., Gupta, A., & Turel, O. (2013). The dark side of information technology use. *Information Systems Journal*, *23*(3), 269–275. https://doi.org/10.1111/isj.12015

Toohey, L. (2021). Trade law architecture after the fourth industrial revolution. In S. Peng, C.-F. Lin, & T. Streinz (Eds.), *Artificial Intelligence and International Economic Law* (1st ed., pp. 337–352). Cambridge University Press. https://doi.org/10.1017/9781108954006.018

Tutun, S., Tosyali, A., Sangrody, H., Khasawneh, M., Johnson, M., Albizri, A., & Harfouche, A. (2023). Artificial intelligence in energy industry: Forecasting electricity consumption through cohort intelligence & adaptive neural fuzzy inference system. *Journal of Business Analytics*, *6*(1), 59–76. https://doi.org/10.1080/2573234X.2022.2046514

Vanderkooi, D., Mashatan, A., & Turetken, O. (2024). Introducing technological disruption: How breaking media attention on corporate events impacts online sentiment. *Journal of Business Analytics*, *7*(2), 63–82. https://doi.org/10.1080/2573234X.2023.2274088

Vidgen, R., Hindle, G., & Randolph, I. (2020). Exploring the ethical implications of business analytics with a business ethics canvas. *European Journal of Operational Research*, *281*(3), 491–501. https://doi.org/10.1016/j.ejor.2019.04.036

Weber, R. H. (2021). Global law in the face of datafication and artificial intelligence. In S. Peng, C.-F. Lin, & T. Streinz (Eds.), *Artificial intelligence and international economic law: Disruption, regulation, and reconfiguration* (pp. 54–69). Cambridge University Press.

Wiener, N. (1988). *The human use of human beings: Cybernetics and society*. Da Capo Press.

Wiener, N. (2019). *Cybernetics or control and communication in the animal and the machine*. The MIT Press. https://doi.org/10.7551/mitpress/11810.001.0001

Wittgenstein, L. (1965). *Preliminary studies for the 'philosophical investigations': Generally known as the blue and Brown books*. Harper and Row.

Wittgenstein, L. (2021). *Tractatus logico-philosophicus. Centenary edition/edited and with a foreword by Luciano Bazzocchi; introduction by P.M.S. Hacker*. (L. Bazzocchi, Ed.). Anthem Press.

Wittgenstein, L., Bosanquet, R. G., & Diamond, C. (1989). *Wittgenstein's lectures on the foundations of mathematics, Cambridge, 1939: From the notes of R.G. Bosanquet, Norman Malcolm, Rush Rhees, and Yorick Smythies* (University of Chicago Press ed.). University of Chicago Press.

Yadav, N. (2023). Ethics of artificial intelligence and robotics: Key issues and modern ways to solve them. *Journal of Digital Technologies and Law*, *1*(4), 955–972. https://doi.org/10.21202/jdtl.2023.41